Horizontal Stainless Steel
Close-coupled End Suction Centrifugal Pump

50HZ OR 60HZ

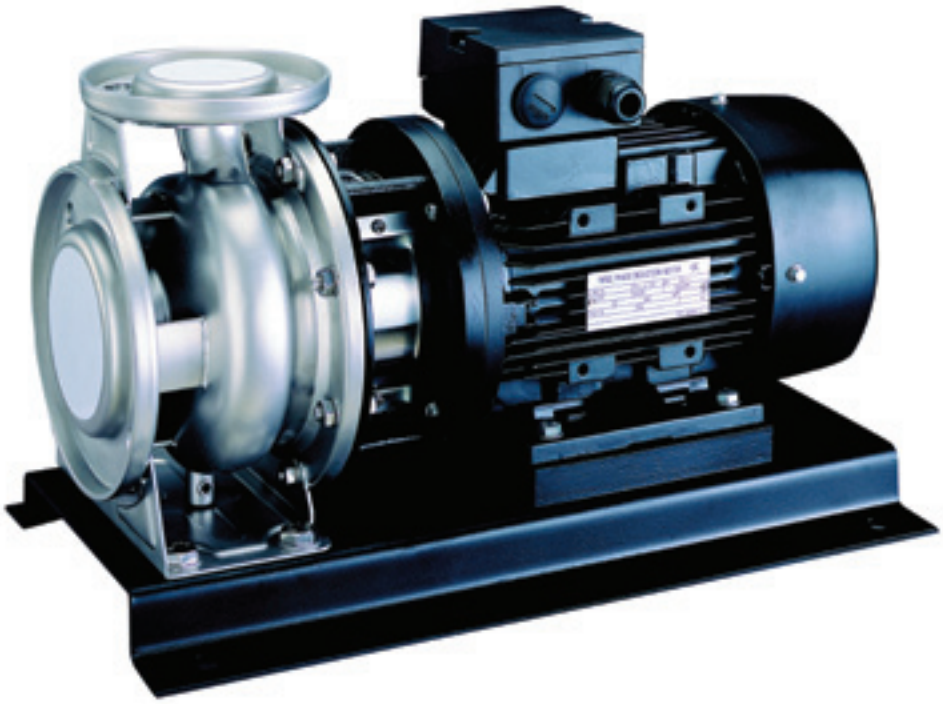

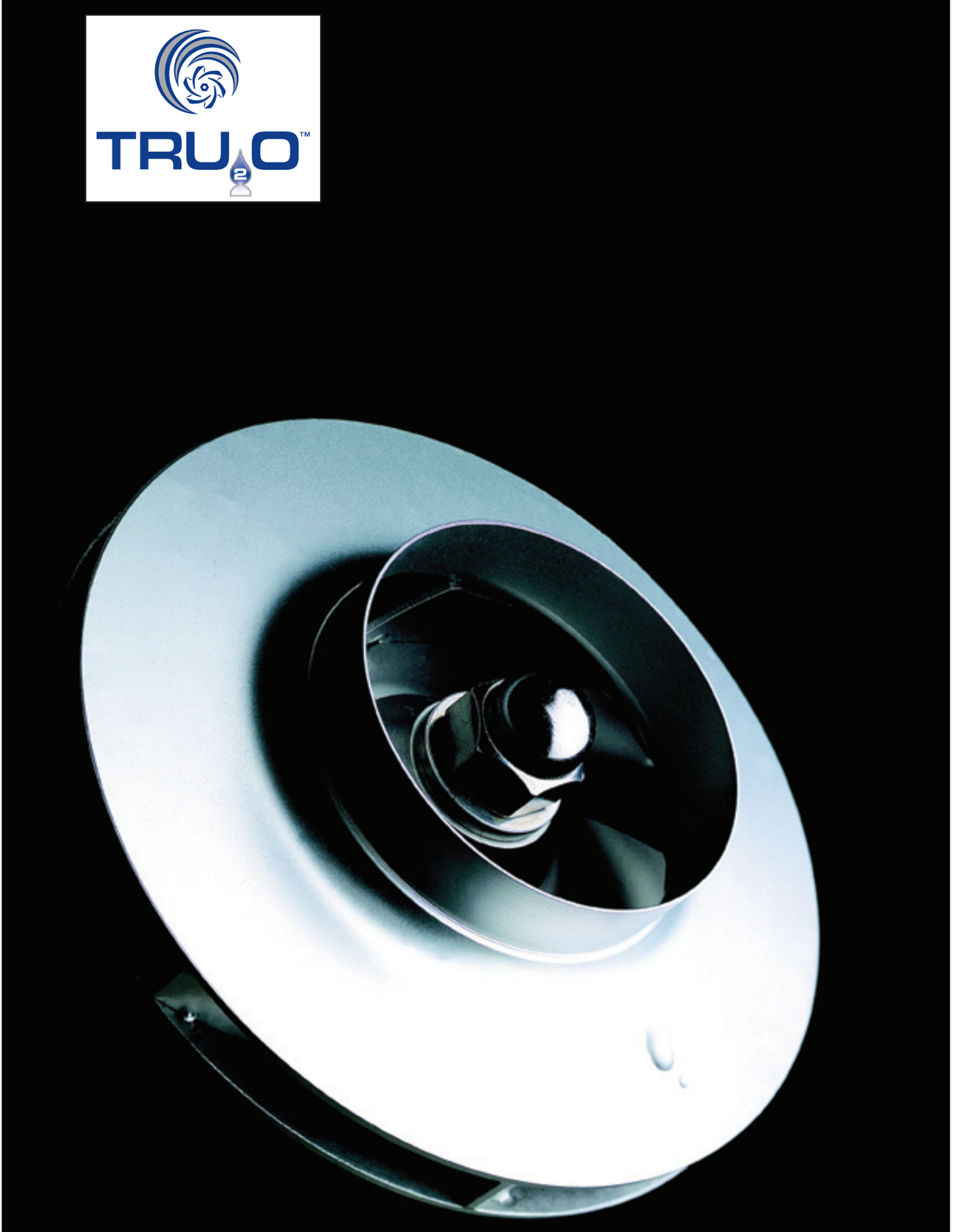

Horizontal Stainless Steel Close-coupled End Suction Centrifugal Pump

APPLICATIONS

- General water supply
- Cooling water system
- Sprinkler system
- Agriculture
- Boosting & circilation systems
- Water treatment
- Medicine & sanitation
- Petrochemical industry
- Fire fighting system

OPERATING LIMITS

- Flow rates up to: 70m^3/h
- Head up to: 70m
- Max operating pressure: 10bar
- Water temperaturer: -20℃- +100℃
- Max ambient temperaturer: +50℃

DESIGN

Hydraulic parts

All stainless steel horizontal single stage not self-priming design, suitable for various mediums including water or industrial liquid. Manufacturered in AISI316 or AISI304 stainless steel in compliance with EN733 DIN24255. The assembly dimensions of the mechanical seal are in compliance with DIN24960-ISO3069. Pump with stub shaft and standard motor.

Electric motor

The pump is couped with a totally enclosed, fan-cooled squirrel-cage aluminum casing(less than 7.5kw) IEC standard motor built-in thrermal overload unit.

Enclosure class: IP55
Speed: 2900rpm or 3500rpm
Insulation class: F
Standard voltage: 1x220-240V, 50hz or 60hz
3x220-240/380-415V, 50hz or 60hz
Sound level: <75dB(A)

MODEL CODE

Z S 50 - 32 - 200/5.5

- 5.5 — Motor power (kW)
- 200 — Impeller nominal diameter (mm)
- 32 — Diameter of discharge port (mm)
- 50 — Diameter of suction port (mm)
- S — Stub shaft type
- Z — Stainless steel end suction centrifugal pump

GENERAL ARRANGEMENT DRAWING AND MATERIAL

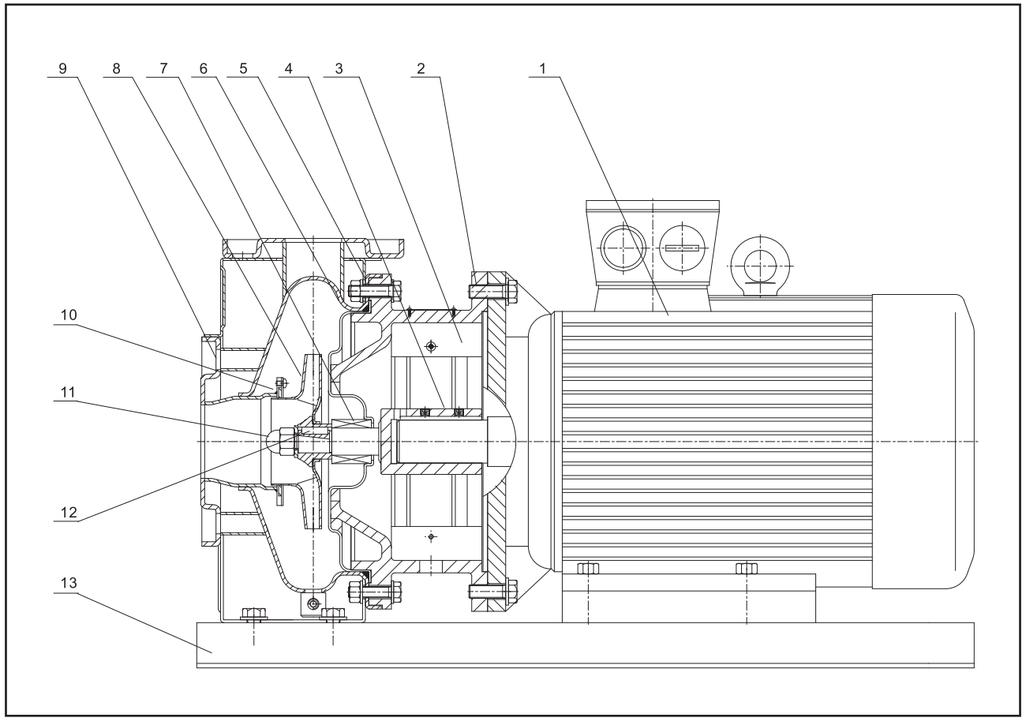

Part No.	Name	Material	AISI/ASTM
1	Motor		
2	Motor bracket	Cast iron	ASTM25B
3	Guard plate	Stainless steel	AISI 304
4	Stub shaft	Stainless steel	AISI 420/AISI 304
※ 5	Rubber parts	Rubber	EPDM
※ 6	Lining of pump head	Stainless steel	AISI 304
※ 7	Mechanical seal	Carbon/Silicon Carbide	
※ 8	Impeller	Stainless steel	AISI 304
9	Casing	Stainless steel	AISI 304
※ 10	Wear ring	PTEF	PTEF
※ 11	Impeller nut	Stainless steel	AISI 304
※ 12	Impeller key	Stainless steel	AISI 304
13	Base plate	Carbon steel	ASTMA570

※Recommended spare parts.
316 Stainless steel for the pump on request.

SELECTION CHARTS

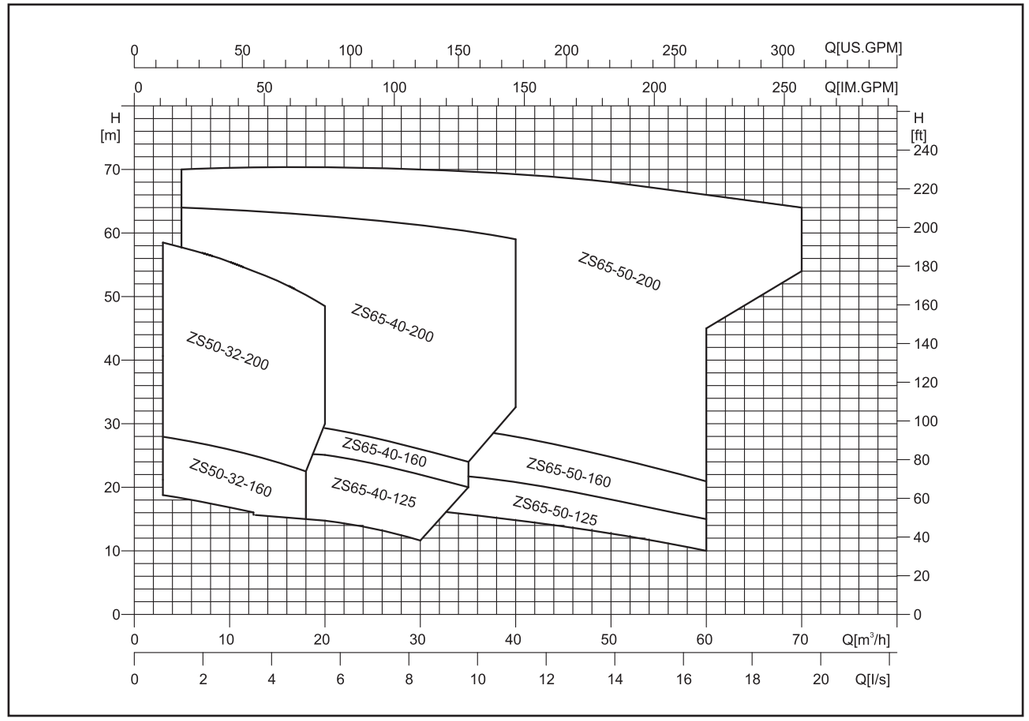

OPERATING TABLE

Model	Power (kW)	Q(m³/h)	3	5	10	12.5	15	18	20	25	30	35	40	50	60	70
ZS50-32-160/1.1	1.1	H(m)	18.7	18.2	17	16.4										
ZS50-32--160/1.5	1.5		22.5	22.3	21	20	19	18								
ZS50-32--160/2.2	2.2		28	27.5	26	25	24	22.5								
ZS50-32-200/3.0	3		34.9	34.4	33	32	31	30	29							
ZS50-32-200/4.0	4		45.7	45	43	42	41	39	38							
ZS50-32-200/5.5	5.5		58.5	58	56	54	53	50	49							
ZS65-40-125/5.5	1.5	H(m)			15.4	15.2	15	14.7	14.4	13	11.3					
ZS65-40-125/2.2	2.2				19.7	19.6	19.5	19.3	19	18	16.7	15.2				
ZS65-40-125/3.0	3				25.3	25.2	25.1	25	24.8	24	22.3	20.3				
ZS65-40-160/4.0	4				29.7	29.4	29.3	29	28.9	28	26.5	24.5				
ZS65-40-200/5.5	5.5				37.2	37	36.7	36.5	36.4	36	35.5	34.6	33.3			
ZS65-40-200/7.5	7.5				47.5	47.2	47	46.8	46.6	46	45.2	44.5	43.3			
ZS65-40-200/11	11				63.5	63.2	63	62.8	62.5	62	61.5	60.5	59			
ZS65-50-125/3.0	3	H(m)						17.3	17.2	17	16.4	15.7	15.1	13	10	
ZS65-50-125/4.0	4							23.8	23.6	23	22.6	21.5	20.7	18	14.8	
ZS65-50-160/5.5	5.5							31.1	31	31.5	30	29	28	25	21.5	
ZS65-50-200/7.5	7.5							36.4	36.4	36	35.6	35	34.1	32	29.6	
ZS65-50-200/9.2	9.2							43.5	43.5	43.2	43	43.5	42	40	37.5	
ZS65-50-200/11	11							51.3	51	51.5	50	49.8	49.3	48	45.6	
ZS65-50-200/15	15							59.7	59.6	59.5	59.5	59.3	59	58	56.2	53
ZS65-50-200/18.5	18.5							70.2	70.1	70.1	70	69.5	69.1	68	66.4	64

ZS50-32-160

ISO2548 AnnexB

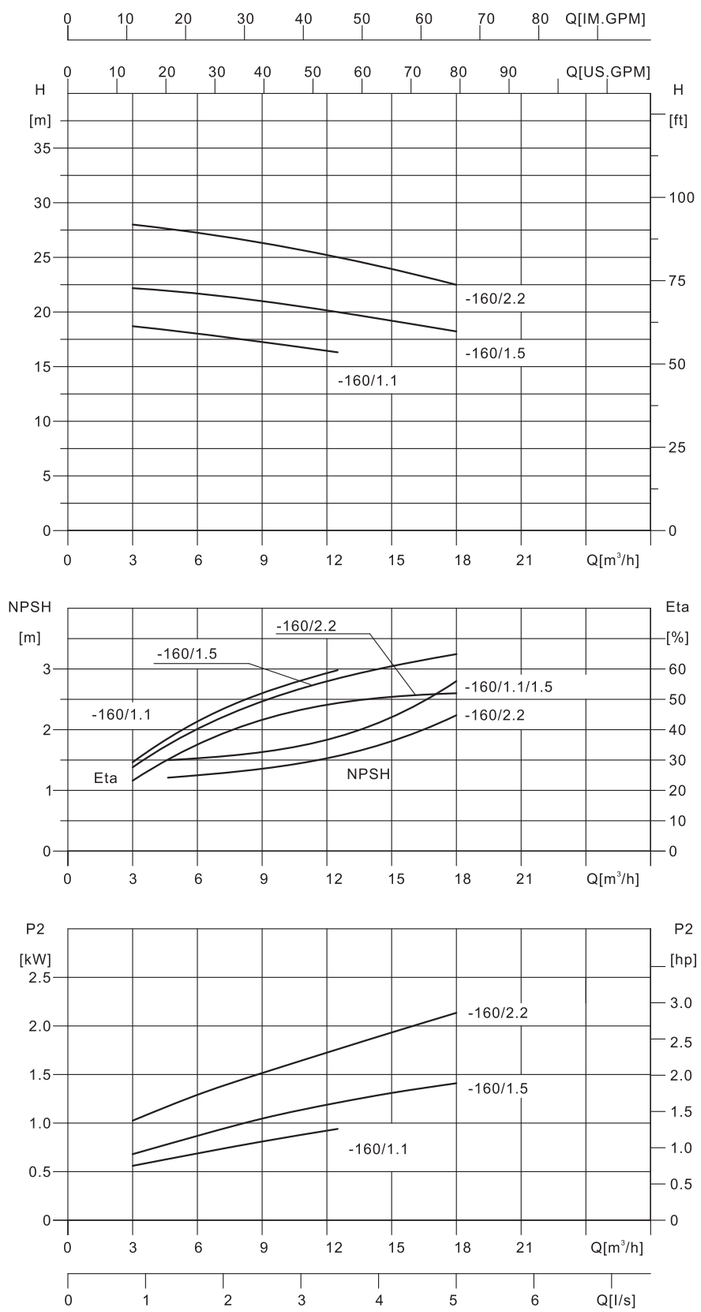

ZS50-32-200

ISO2548 AnnexB

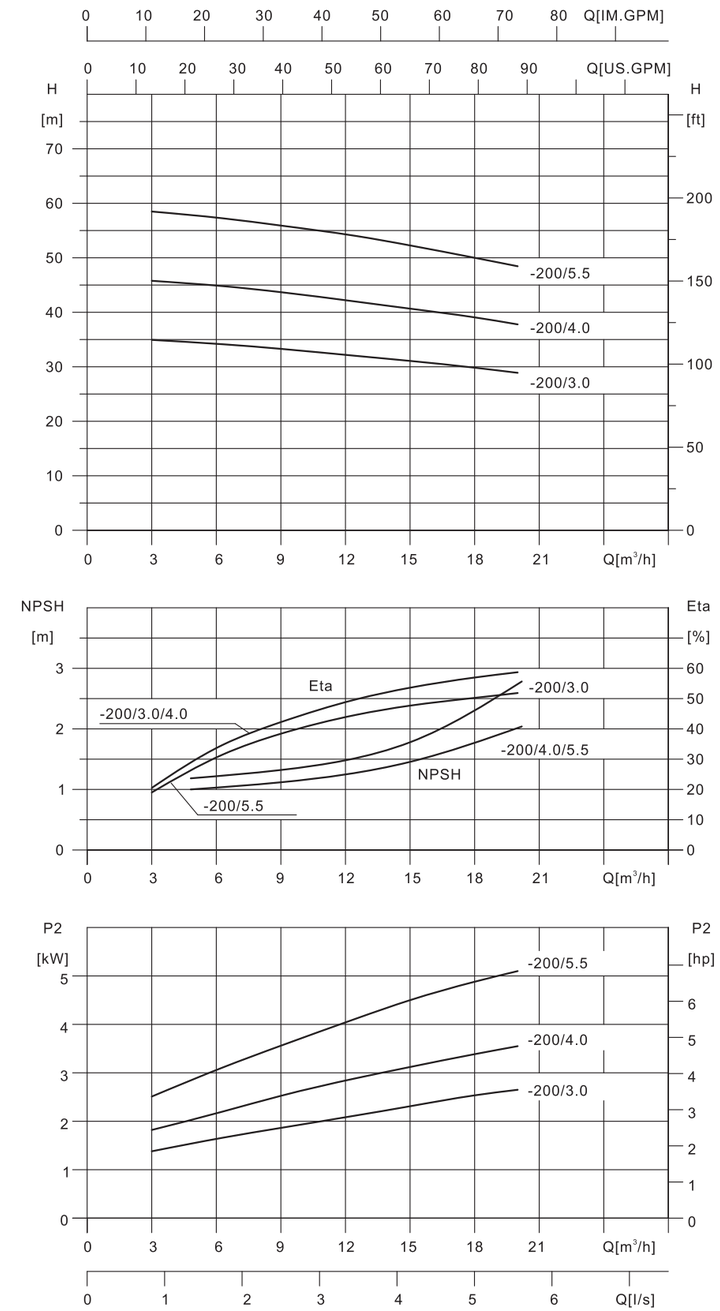

ZS65-40-125

ISO2548 AnnexB

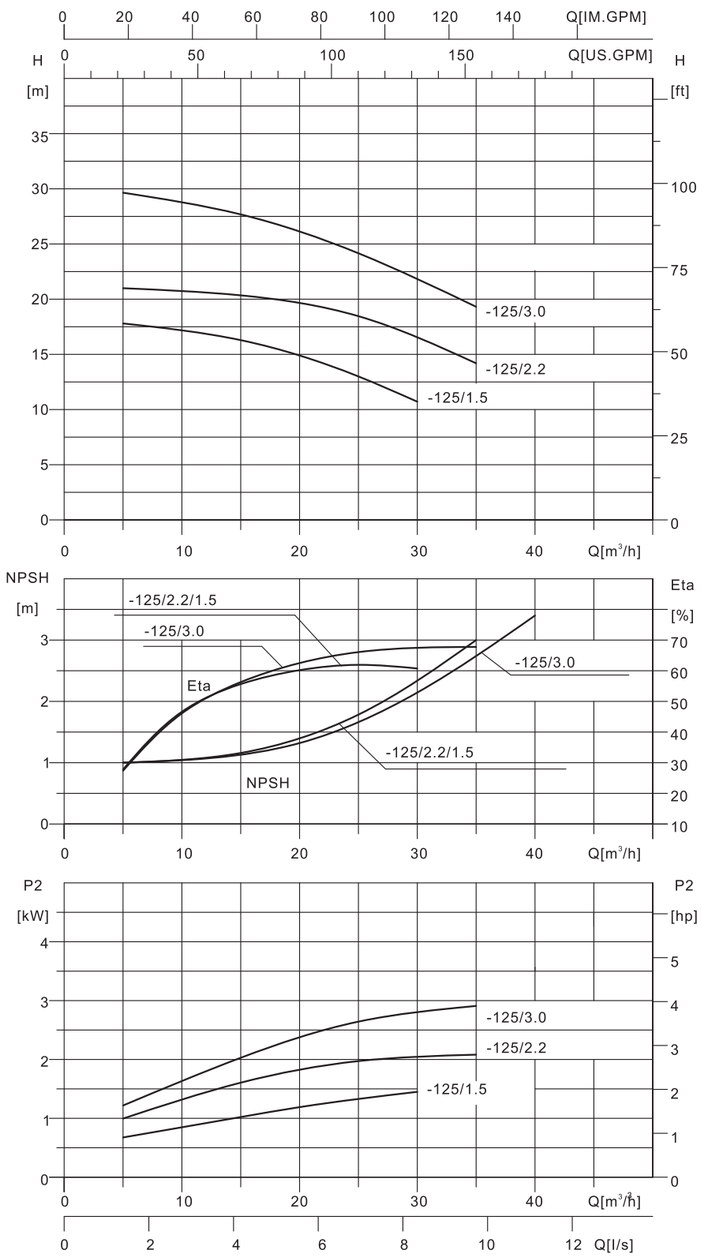

ZS65-40-160

ISO2548 AnnexB

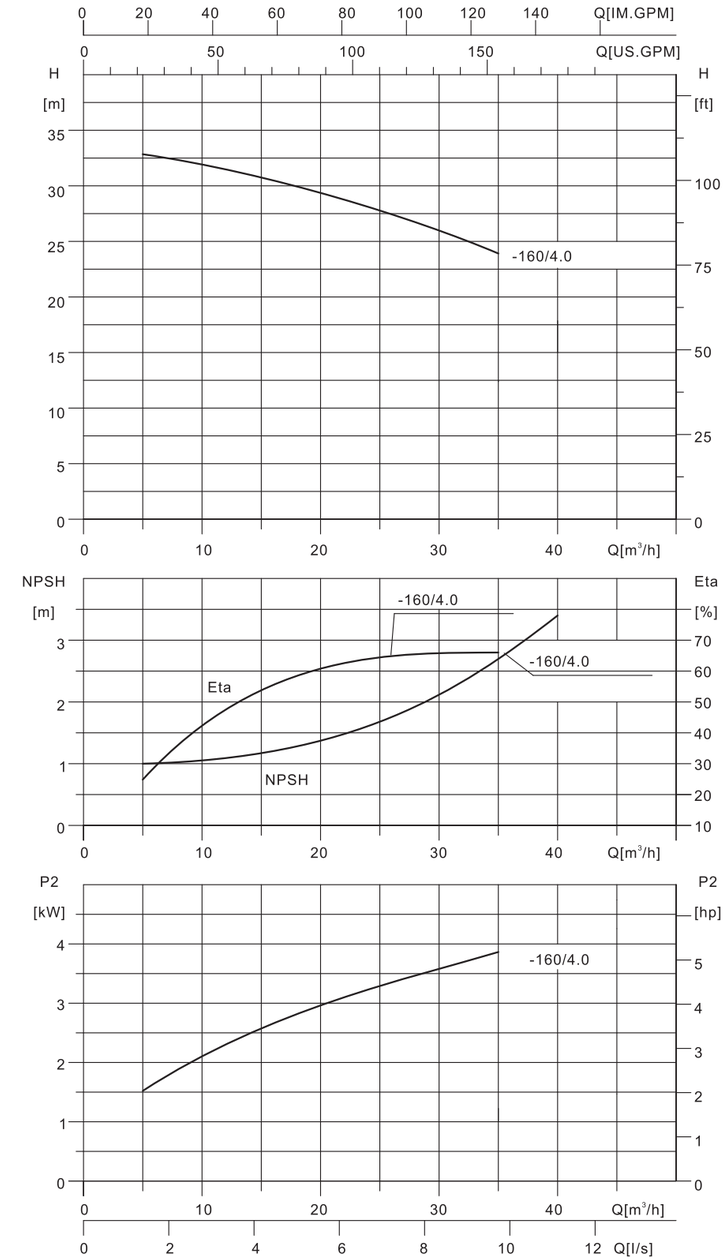

ZS65-40-200

ISO2548 AnnexB

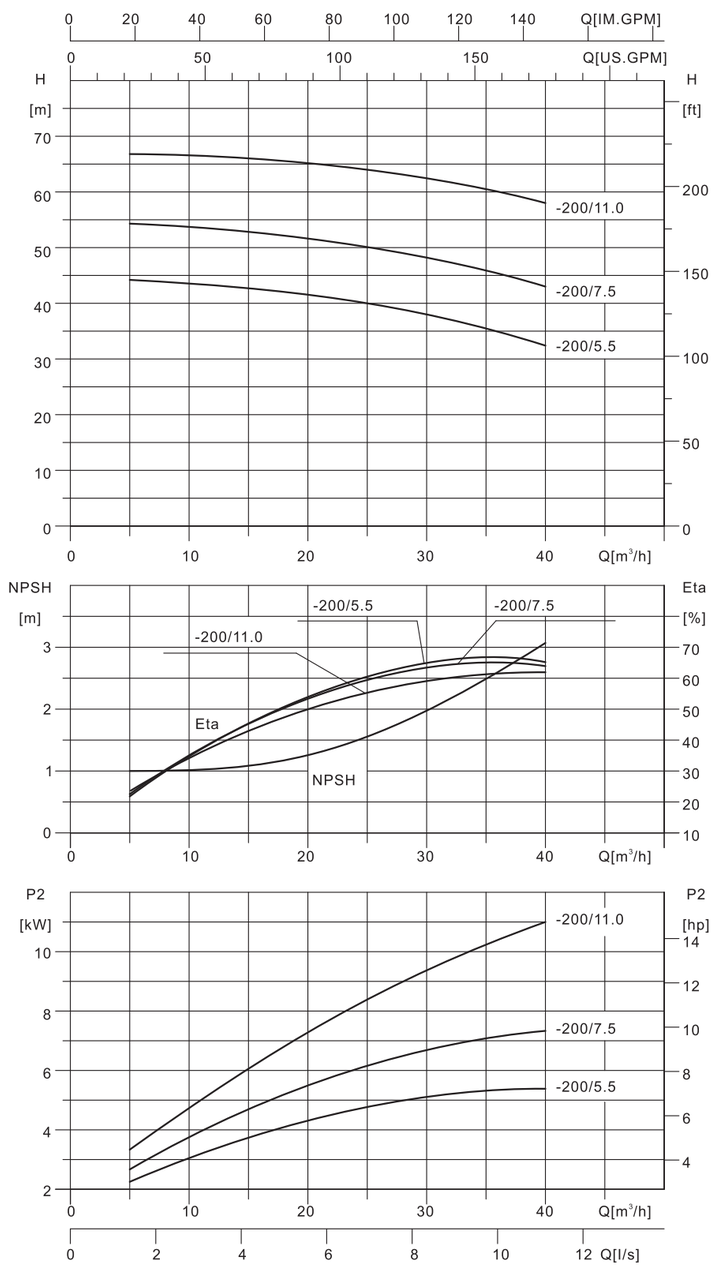

ZS65-50-125

ISO2548 AnnexB

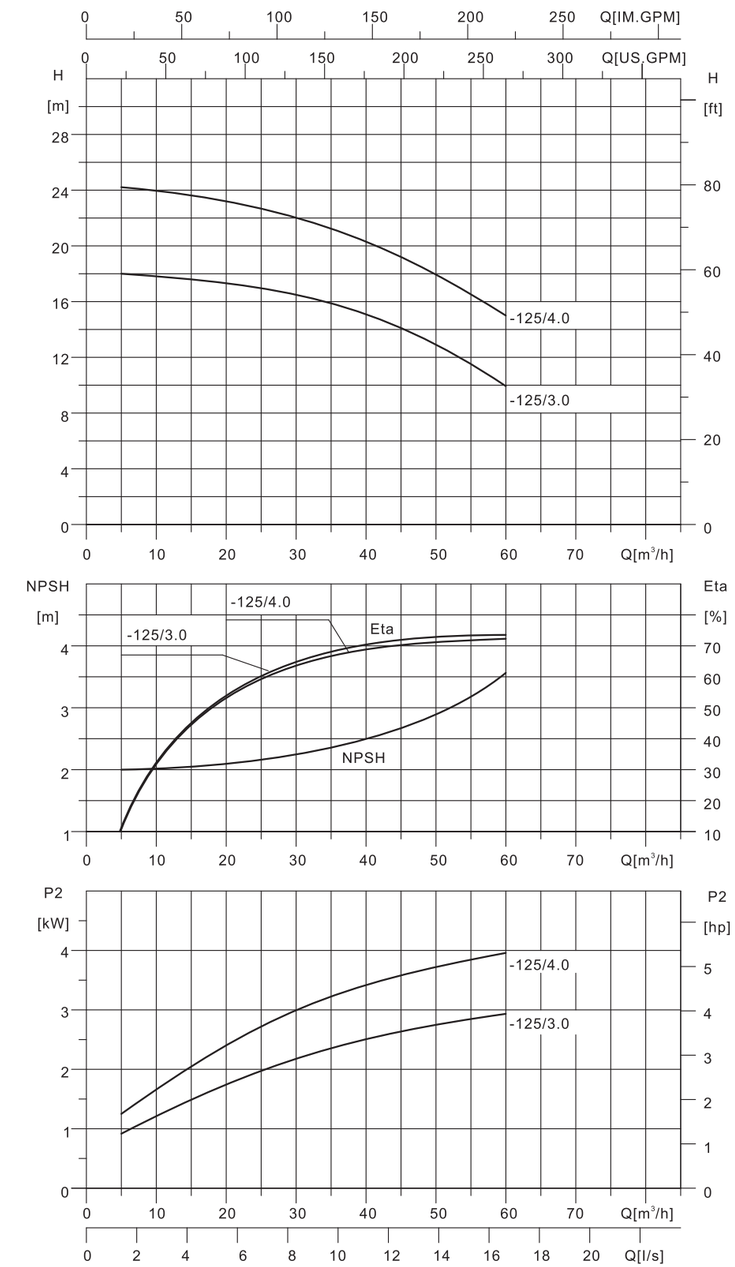

ZS65-50-160

ISO2548 AnnexB

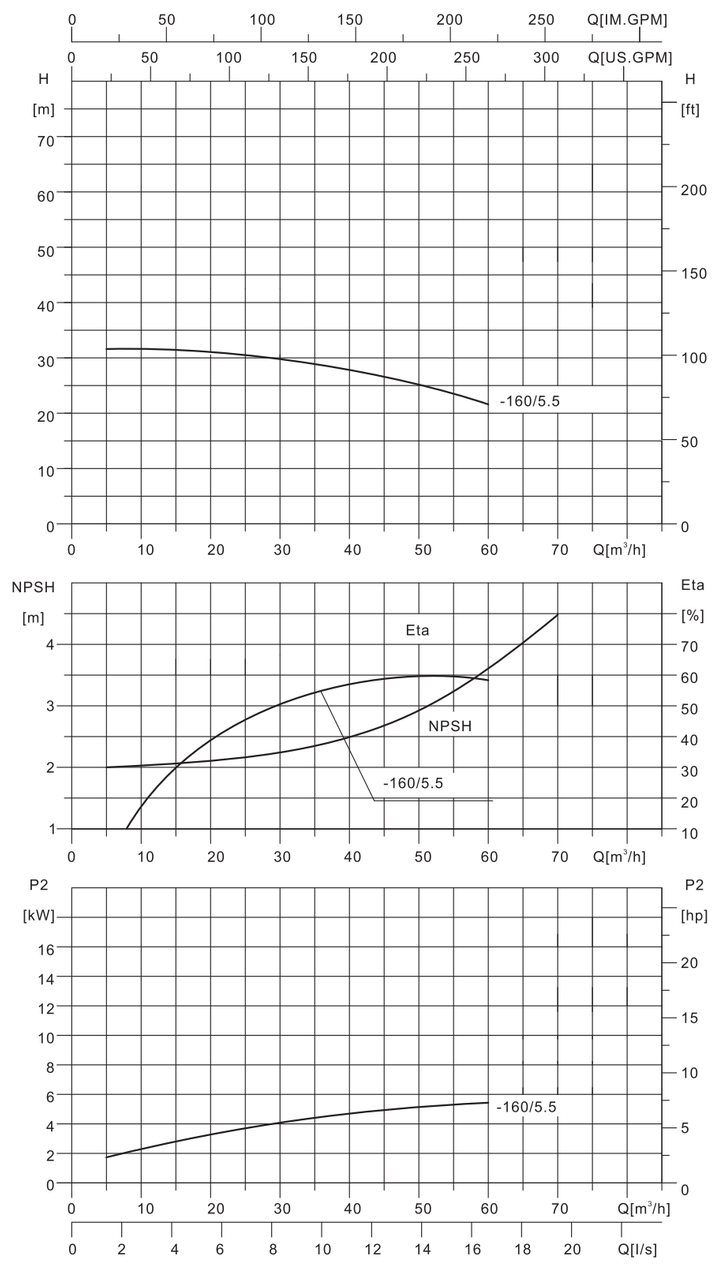

ZS65-50-200

ISO2548 AnnexB

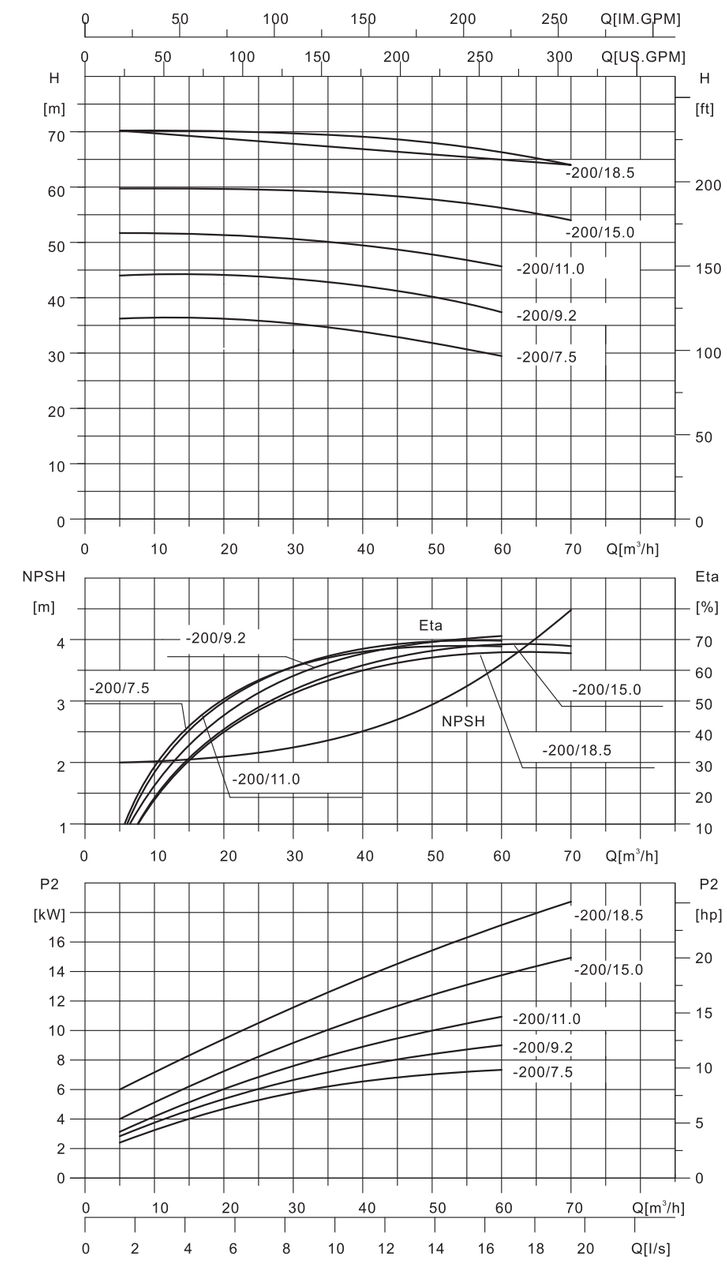

INSTALLATION DIMENSIONS

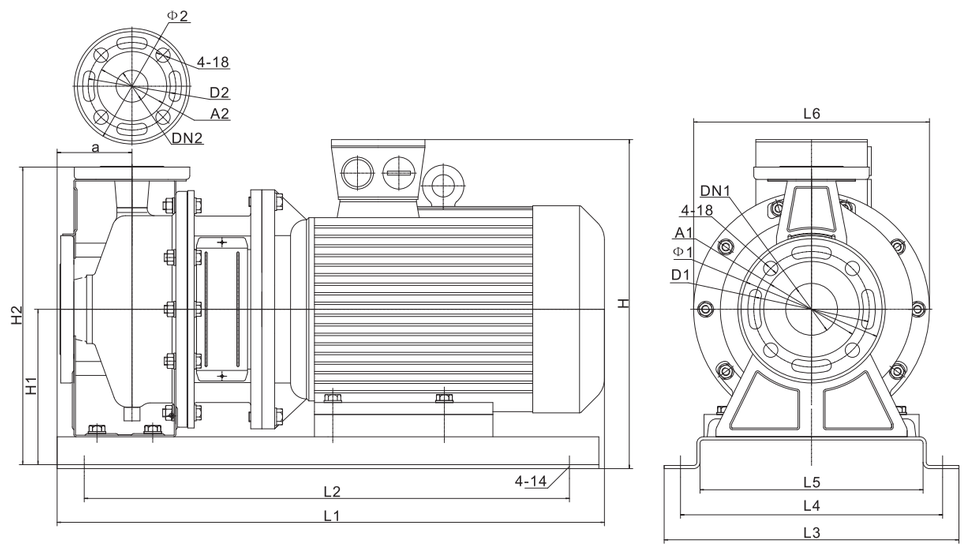

Model	Size(mm)																			Weight	
	DN1	DN2	A1	A2	D1	D2	D3	D4	a	a1	H	H1	H2	L1	L2	L3	L4	L5	L6	G.W	N.W
ZS50-32-160/1.1	50	32	98	75	125	100	160	139	80	32	290	152	296	470	370	280	240	192	210	31	36
ZS50-32-160/1.5	50	32	98	75	125	100	160	139	80	46	307	152	296	500	430	280	240	192	210	37	43
ZS50-32-160/2.2	50	32	98	75	125	100	160	139	80	46	307	152	296	500	430	280	240	192	210	39	45
ZS50-32-200/3.0	50	32	98	75	125	100	160	139	84	42	370	200	386	550	460	330	290	242	300	53	60
ZS50-32-200/4.0	50	32	98	75	125	100	160	139	84	47	393	200	386	560	480	330	290	242	300	58	65
ZS50-32-200/5.5	50	32	98	75	125	100	160	139	84	50	413	200	386	660	580	370	330	280	300	77	85
ZS65-40-125/1.5	65	40	118	84	145	110	185	145	80	45	307	152	294	502	430	280	240	192	210	33	38
ZS65-40-125/2.2	65	40	118	84	145	110	185	145	80	45	307	152	294	502	430	280	240	192	210	35	40
ZS65-40-125/3.0	65	40	118	84	145	110	185	145	80	45	322	152	294	532	460	300	260	212	250	47	53
ZS65-40-160/4.0	65	40	118	84	145	110	185	145	80	45	345	152	294	557	480	330	290	242	250	52	58
ZS65-40-200/5.5	65	40	118	84	145	110	185	145	100	50	413	200	380	680	580	370	330	280	300	78	86
ZS65-40-200/7.5	65	40	118	84	145	110	185	145	100	50	413	200	380	680	580	370	330	280	300	82	90
ZS65-40-200/11.0	65	40	118	84	145	110	185	145	100	50	456	200	380	790	690	420	380	330	350	161	171
ZS65-50-125/3.0	65	50	118	98	145	125	185	160	86	45	342	172	338	548	468	330	290	242	250	49	55
ZS65-50-125/4.0	65	50	118	98	145	125	185	160	86	45	365	172	338	570	490	330	290	242	250	54	61
ZS65-50-160/5.5	65	50	118	98	145	125	185	160	100	50	413	200	380	680	580	370	330	280	300	78	87
ZS65-50-200/7.5	65	50	118	98	145	125	185	160	100	50	413	200	380	680	580	370	330	280	300	82	91
ZS65-50-200/9.2	65	50	118	98	145	125	185	160	100	50	413	200	380	680	580	370	330	280	300	85	94
ZS65-50-200/11.0	65	50	118	98	145	125	185	160	100	50	456	200	380	790	690	420	380	330	350	161	171
ZS65-50-200/15.0	65	50	118	98	145	125	185	160	100	50	456	200	380	790	690	420	380	330	350	171	181
ZS65-50-200/18.5	65	50	118	98	145	125	185	160	100	50	456	200	380	830	730	420	380	330	350	188	199

7105 Cessna Drive,
Greensboro, NC 27409
336-664-9225 (Phone)
336-664-1353 (Fax)