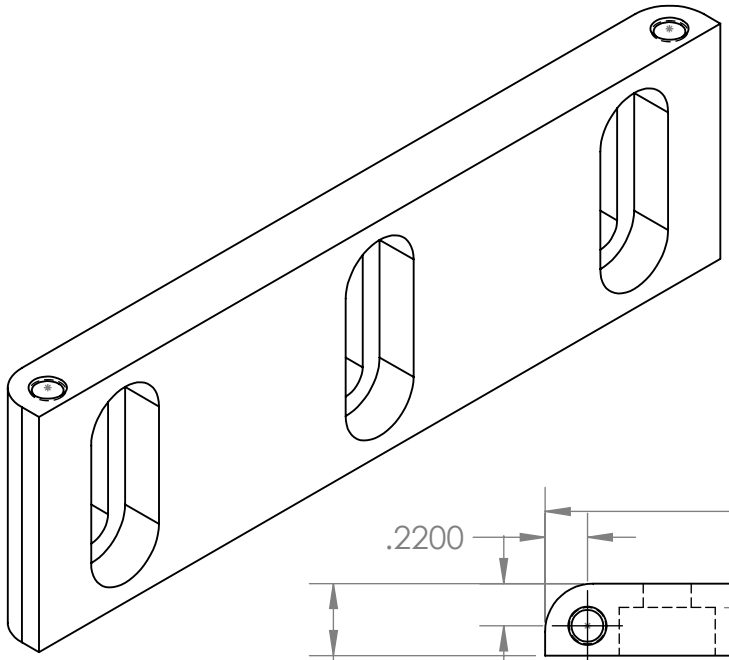

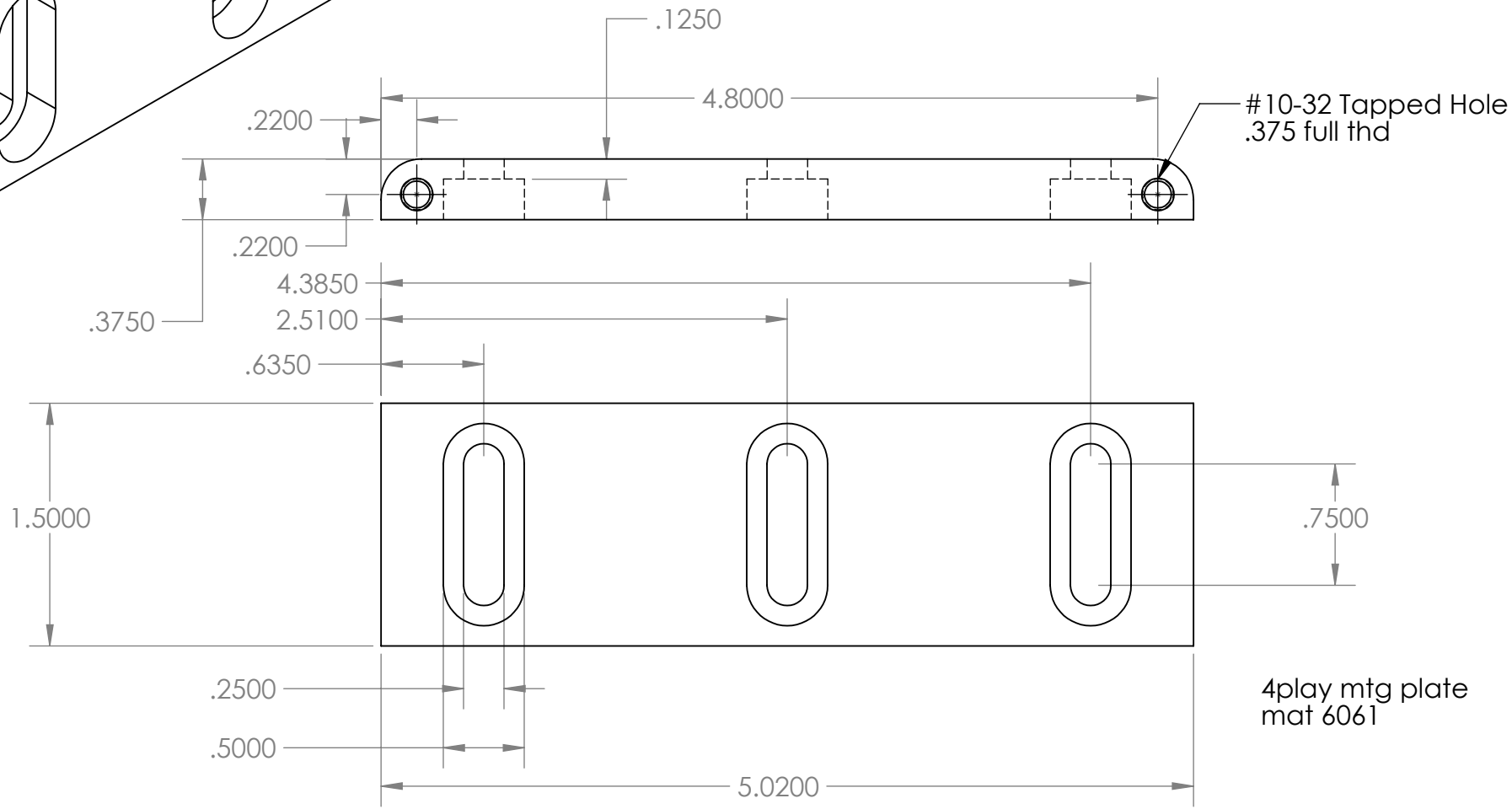

4play mtg plate
mat 6061