Large Screen Panel Instruments

User Manual

1 Summary

This manual covers YUDIAN large LCD touch screen series

1.1 AI-3170S/3170W /3190S/3190W split-type paperless recorder

1.2 AI-3270S/3270W /3290S/3290W touch screen

1.3 AI-3756/3756P/3759/3759P/3956/3956P/3959/3959P series a rtificial intelligence temperature controller/industry regulator

1.4 AI-37028/37048/39028/39048 multi-channel touch screen artificial intelligence temperature controller/industry regulator

1.5 AI-3702M/3704M/3706M/3902M/3904M/3906M multi-channel touch screen indicator.

2 Technical Specifications

2.1 Display

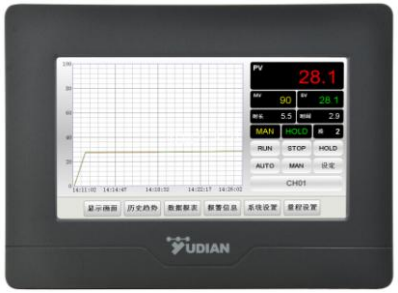

Screen diagonal：7 inch / 9-inch

Color：TFT true color

Resolution (W×H)：800×480 pixels

Backlight：Long- lifespan LED

Operation method：Touch Screen

2.3 Memory

Storage for application data：150 MB

Recording interval：One second interval (1,2, 3 or 4 second etc)

2.4 Communication

Interface type：RS232, RS485, Ethernet interface (10 / 100M adaptive Ethernet)

Baud rate：1200-115200 bps

2.5 Parameters

Electromagnetic compatibility (EMC)： ±4KV/5KHz according to IEC61000-4-4 (Electrical Fast Transient); 4KV according to IEC61000-4-5 (Electrical surge) and no system hang and I/O malfunction at 10V/m high frequency EM interference. Measurement fluctuation is less than ±5% of the full scale.

Isolation withstanding voltage：

Between power, relay contact or signal terminals≥2300VDC;

between isolated Electroweak signal terminals≥600VDC

Power supply：100~240VAC,-15% +10%/50-60Hz

Power consumption：≤5W

Operating ambient：Temperature：-20℃~+ 80℃；Humidity：≤ 90%RH

Storage temperature：-20℃~+ 80℃

Net Weight：0.6kg

Cooling：Natural

3 Instrument Installation

3.1 Hook Installation Diagram

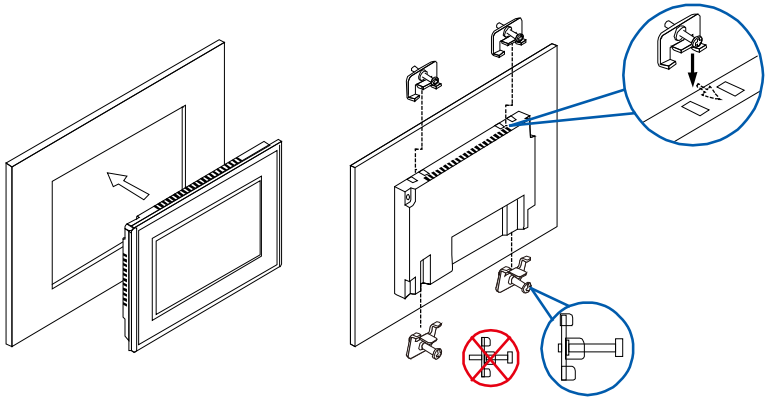

Before installation, ensure the screws are slightly drilled into the hooks only.

3.2 Dimensional Drawings

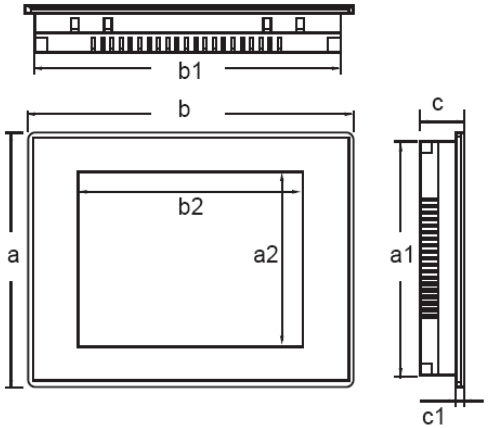

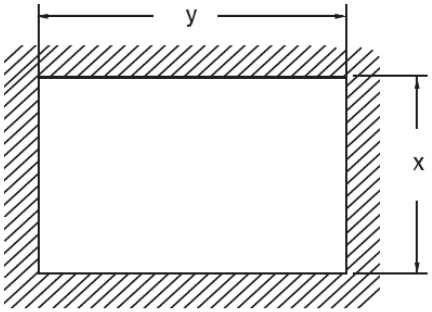

		Display Size (mm)		Outer Dimension (mm)						Opening size (mm)	
		a2	b2	a	b	c	a1	b1	c1	x	Y
3700 Series (3170/3270)	7 inch	86	154	150	203	40	137	190	6	139	192
3900 Series (3190/3290)	9 inch	112	198	170	231	38	158	219	9	160	221

4 Instrument Wiring

4.1 Interface Type

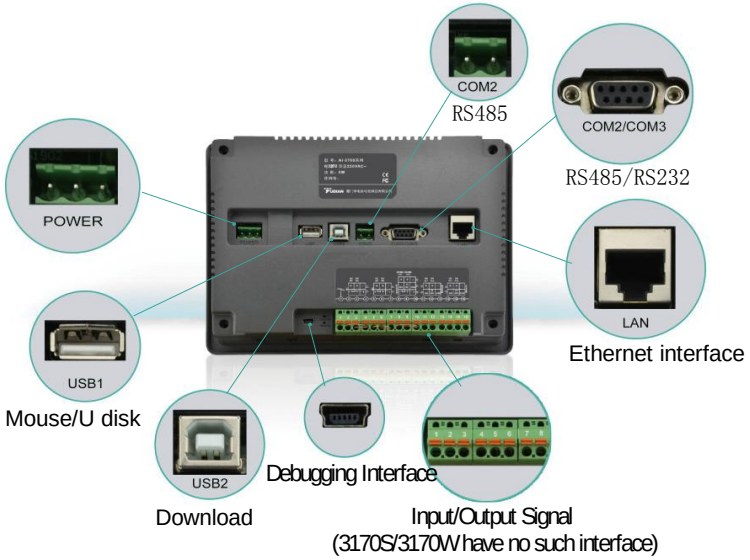

4.2 Power Wiring

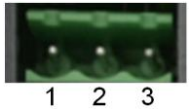

Interface	POWER		
PIN	1	2	3
PIN Definition	L	Blank	N

4.3 Communication Wiring

Interface	COM2(RS485)	
PIN	1	2
PIN Definition	RS485+	RS485-

Interface	COM2(RS485)		COM3(RS232)		
PIN	5	9	1	8	7
PIN Definition	RS485+	RS485-	RS232 GND	RS232 TXD	RS232 RXD

Note 1: AI-3170S/3170W/ 3190S/3190W must use COM2 interface, both COM2 and COM2/COM3 interfaces are available.

Note 2: No communication wire is required if there is expanded function module

4.4 Input and Output Wiring

AI-3756/3756P/3759/3759P/3956/3956P/3959/3959P series artificial intelligence temperature controller/industrial regulator

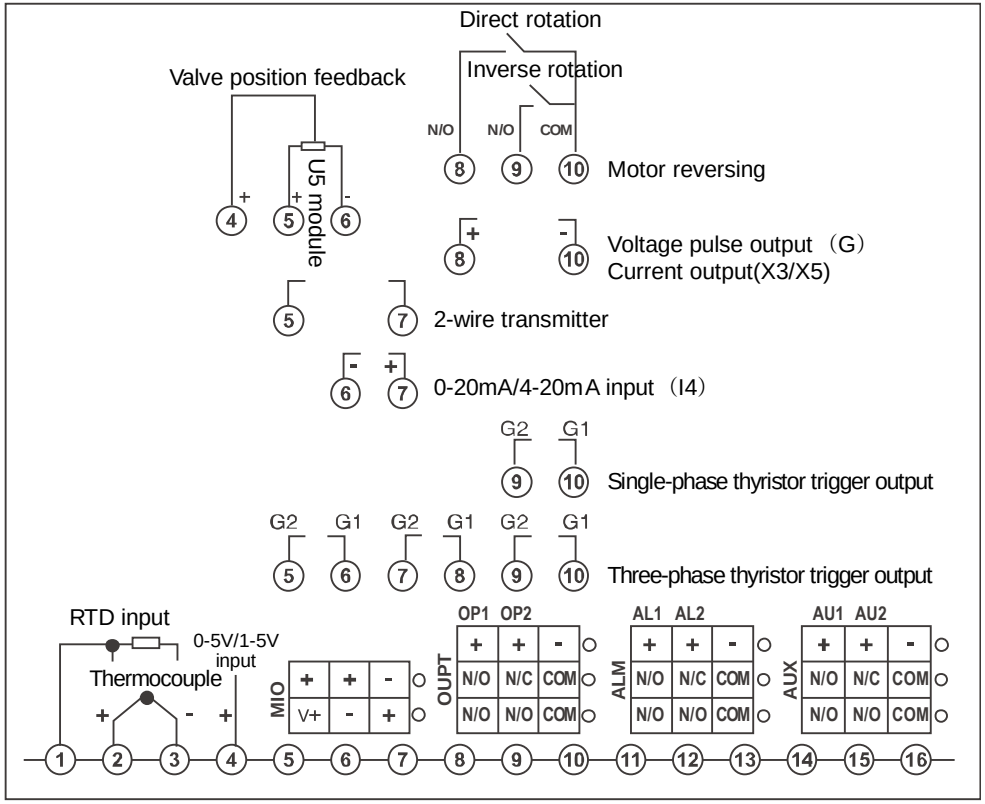

AI-37028/37048/39028/39048 multi-channel touch screen artificial intelligence temperature controller/industrial regulator

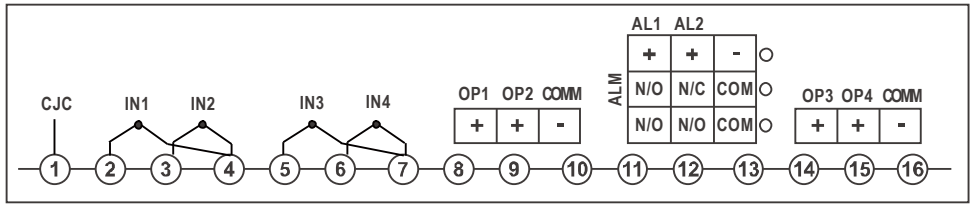

AI-3702M/3704M/3706M/3902M/3904M/3906M multi-channel touch screen indicator.

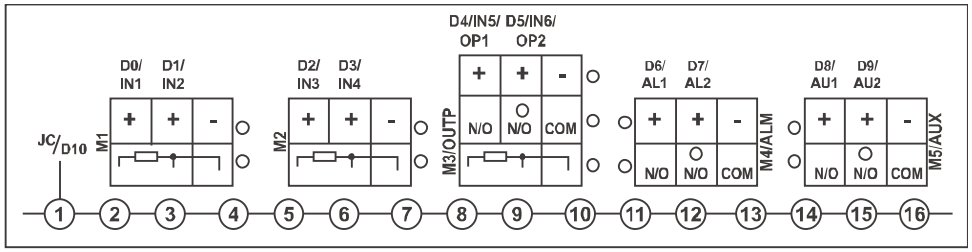

5 Operation Guidance

5.1 Instructions for First Time Operation:

When power is on, click "MeterOpt", enter initial passcode 111.

1) SELECT INSTRUMENT TYPE

Click "Meter Type" pull-down menu, select the meter type corresponding to that channel name.

Note 1: For AI-3170S/3170W/3190S/3190W, please select the model type. 3700/3900 series will detect the instrument type automatically.

Note 2: For AI-3702M/3704M/3706M/3902M/3906M, please select the corresponding input module and specification

2) BROWSE INSTRUMENT PARAMETERS

Enter "MeterOpt" and click "PreCH" or "NextCH" to go through the previous channel or next channel.

3) EDIT INSTRUMENT PARAMETERS

Click the data field and the pull down menu to edit.

For multi-channel instrument, user has to finish all above three procedures to every channel.

Note 1: In the beginning please select the correct "INP" (Input specification) and "DIP" (Decimal Place) which affect the reading and operation significantly. The font colour of other parameters will turn red from black after alternation. Press "Download" to save the parameters. The font colour will return black.

Note 2: This manual covers various type of instrument. Some specific functions are only available certain models.

4) Click "PrePage" or "NextPage" to view all parameters of current channel.

5) Click "SetTime" to reset current time. (Data recorded later the original time will be cleared if time is set backwards.)

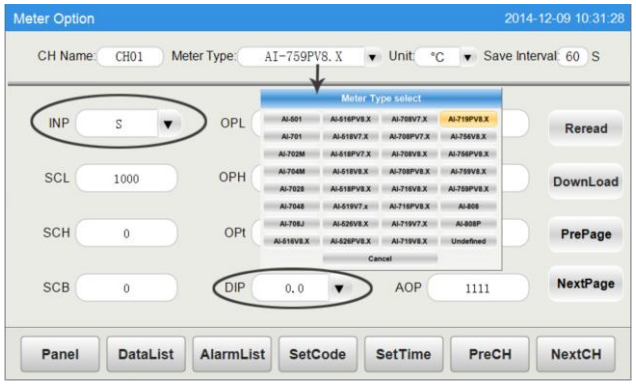

5.2 Instructions for Main Panel Operation:

1) Interface Description

Click "Panel" to go to the main screen, the measure value "PV", set value "SV" and unit are shown.

2) Alarm Status

If an alarm is activated, the corresponding channel title turns red. Click "AlarmList" to get more details.

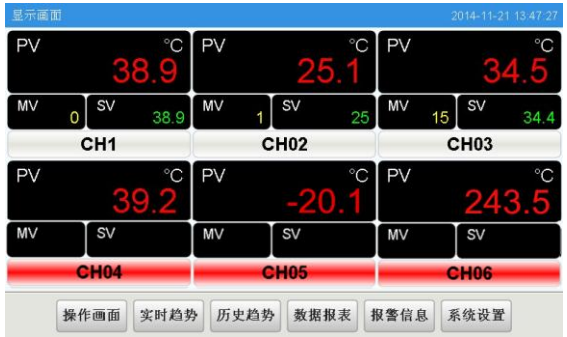

5.3 Instructions for Field Parameter Setting:

5.3.1 Interface Description:

Click "Panel" to show "Chanel Title", corresponding "PV" "SV", "MV", running status, "Man(Manual)/Auto(Automatic)" status. Programmable controllers further display "RunTime" (Running time) , "Step time" and "Step".

In the curve screen, "PV" is shown in red line while "SV" is shown in green line.

5.3.2 Running Status Operation:

Click "RUN" or "STOP" to switch between running status. The initial passcode is 111 (in "MeterOpt"). If "SetCode" button is grey, password change is not allowed at that model.

5.3.3 Field Parameter Setting:

Click "Panel"-"Channel Title"-"Set" , the "Field Parameters Set" window pops up.

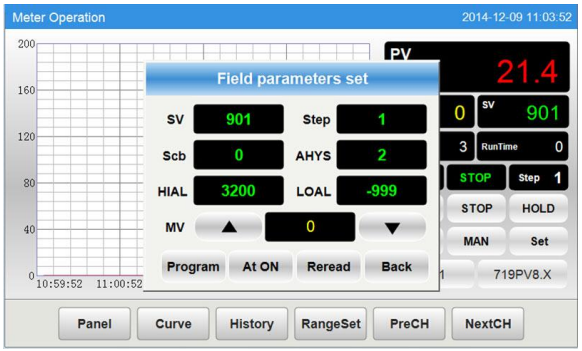

1) Read/write of high alarm "HIAL", low alarm "LoAL", linear shift "Scb" and alarm hysteresis "AHYS".

2) "MV" value can be set under Manual state.

3) Step number can be set.

4) Switch between "At ON" (Auto-tune is on) and "At OFF" (Auto-tune is off). Auto-tune function is available in PID controller. While auto-tune is activated, a message "At" blinks in the "SV" window.

5) "SV" set value can be set directly for single channel controller. For programmable controller, click "Program"-"Program Setting" to set "SV".

5.3.4 Program Setting:

1) Click "Program" to edit program step and time

Method 1: Click the box below "SP01"/"T01", edit the value. Repeat editing values of "SPXX"/"TXX and so on.

Method 2: Click "Select" to pop up the receipt window. Select the receipt such as "pro1". "Apply" receipt and "Return".

Once program values are modified, the value will turn red unless user clicks "DownLoad" to save.

2) Receipt Setting

In "Program Setting", Click "Select" to pop up the receipt window. Temperature value and time value in the receipt can be edited. Users can also add, remove and apply the receipt.

5.3.4 Display Range Setting:

"Curve" screen: Click "CurveSet" to set time and Upper / Lower range. The range can be set manually and automatically. The range will change according to data in automatically mode.

5.4 Meter Option Setting

In “MeterOpt” interface, the instrument configuration of the current channel is automatically shown.

1) Instrument type, measuring unit, channel title and recording interval can be set.
2) The instrument parameters load automatically when entering the interface or switching channels. Click “Reread” to refresh the parameter values. Click “Download” to save the changed values.

5.5 Miscellaneous Setting

Real-time “Curve” interface

1) Click the colour-numbered button show or hide real time curve.
2) Click the “RangeSet” to set the trend cuve span or range.

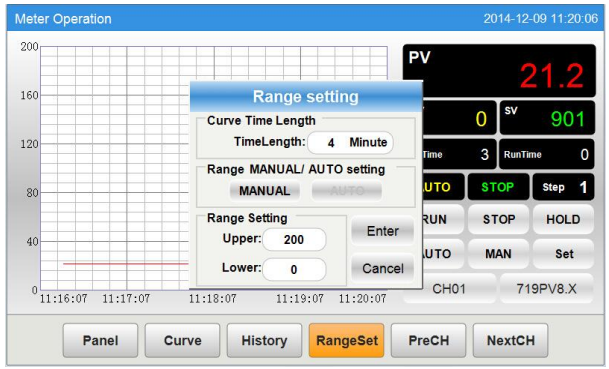

“History” interface

1) Click the colour-numbered button show or hide real time curve.
2) Click “HisSet” to set time and Upper/Lower range and initial time.
3) Click “Retreat” or “Forward” to go backward or forward 3/4 time axis.

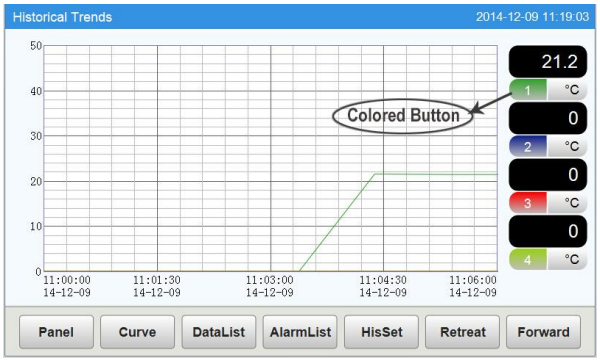

“DataList” history data report interface

1) Click “Time” to set start / end time.

2) Click “Last 24H” to view data since last 24 hours.

3) Click “Current” to view data form start time to current time.

4) Insert USB disk and wait for a while for hardware recognition. Click “Export” will export the data tables in a file named “hisdata.csv” in the USB disk.

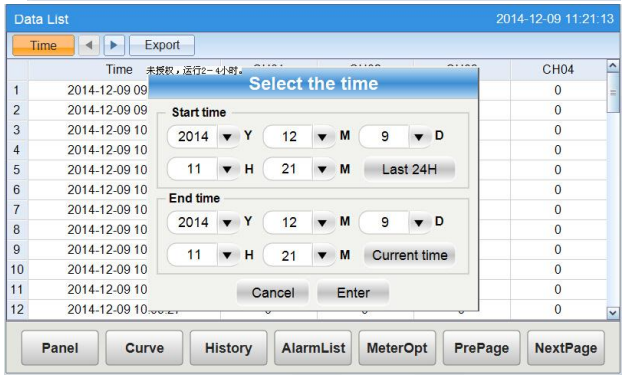

“AlarmList” Alarm report interface

1) Click “Real” or “His.” to switch between the real-time and historical alarm report.

2) Click “Options” to select alarm type and display mode.

3) Insert USB disk and wait for a while for hardware recognition. Click “Export” will export the data tables in a file named “almdata.csv” in the USB disk.